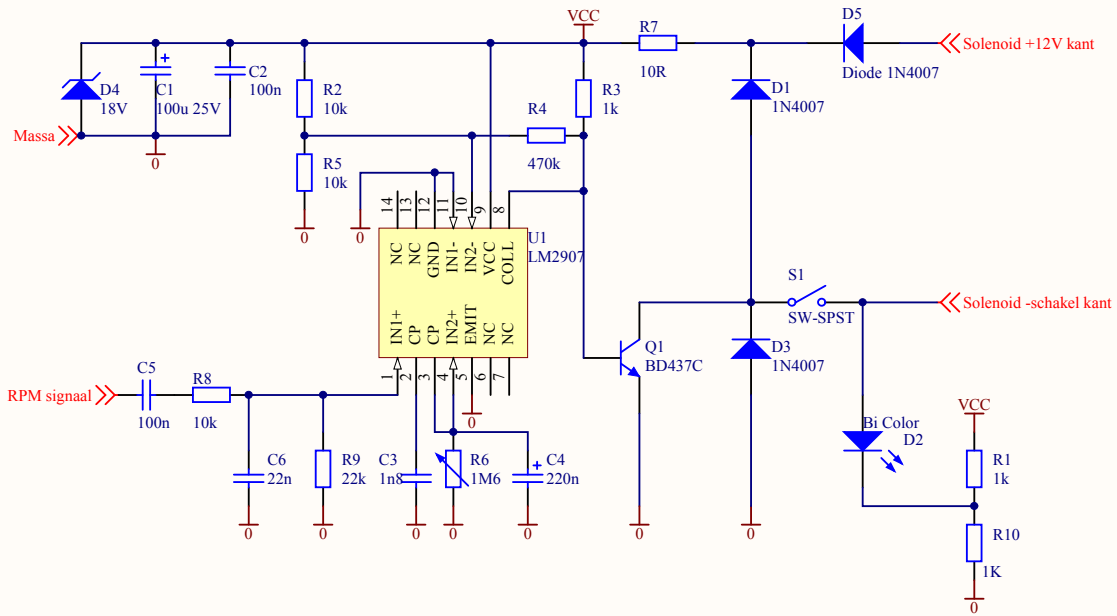

Title		
Size A4	Number	Revision
Date: 18-9-2012		Sheet of
File: Z:\yits\..\Vvis.SchDoc		Drawn By: